Yoswit Smart Light Switch Datasheet

Model: YO2086s-3G (R2)-MEC-A

Revised: 01-12-2024



Transform Your Lighting Experience

Yoswit Smart Light Switch seamlessly connects to traditional wiring with patented technology and effortlessly replaces your original wall switches. Experience wireless control without the need for a hub, and our proprietary topology extends the control distance of the Yoswit device network. Automate lighting with the built-in timer. Once connected to a hub, you can remotely control the switch and integrate it with your smart speakers. Create a symphony of smart living with intelligent linkage among all Yoswit products.

Market-leading Patent Solutions

Our switches support both 2-wire and 3-wire installation without any hubs or routers. With this market-leading patent, we provide users a simple installation experience.

Connection 1: Without neutral wire

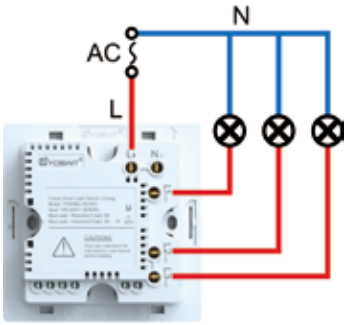

Connection 2: With neutral wire

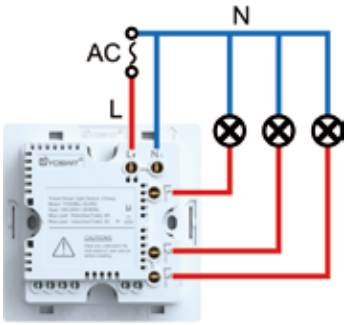

Key Features and Benefits

- 2-wire and 3-wire installation compatible
- Replacement of all your wall switches
- Compatible with the entire family of Yoswit products
- Free Yoswit app
- Outdoor remote control
- Voice control
- Schedule timer to turn on the lights before arrival
- Free room and scene settings
- Bluetooth gateway stable combination

Various Customized Products

We offer a comprehensive selection of smart home products that are seamlessly adapted to the usage standards and various socket types in different countries, ensuring a smooth installation process for all users. With extensive compatibility, our products enable you to control a diverse range of household appliances, including lighting, air conditioning, and TV.

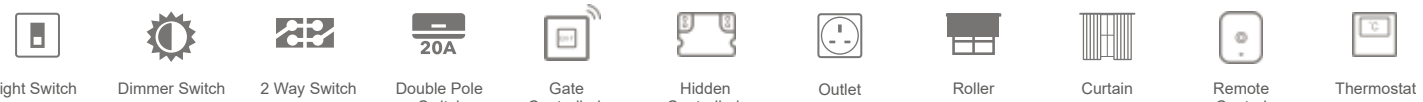

Yoswit App

You can download our app to implement the following functions via Bluetooth and WiFi to control the Yoswit switches.

Time Setting | Scene Mode | Device Network | Away Detection | Password Protection | Network Control | Apple Siri | Google Assistant | IFTTT

Depends on Yoswit Bridge Solutions.

SCAN THE QR CODE TO DOWNLOAD YOSWIT APP

Product Specifications

Color Options:

*You can also customize the colors



Specifications:

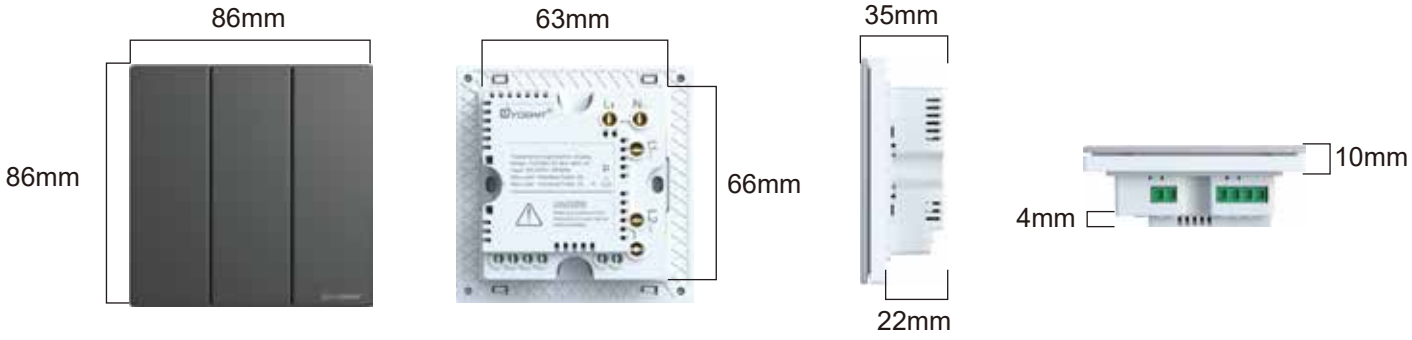

Electrical	
Operation Power	100-240V AC (50/60Hz)
Power Consumption	<1W
Max. Load	6A (Total)

Wireless	
Frequency	2.4GHz
Connection	BLE 4.2
Range	Open Area: >50m / Interior: 3-20m

General Specifications

Product Name	Yoswit Smart Light Switch
Model	YO2086s-3G (R2)-MEC-A
Socket Type	Socket 86
EAN / UPC	EAN: 0765756497947 / UPC: 0765756497947
Revision	V7.0
Compliance	CE, FCC, RoHS
Manufacturer	Designed by Yoswit in Hong Kong, China / Assembled in Guangdong, China
Warranty	Two Year Limited Warranty (*Details available on the Product Warranty and Limitations of this datasheet)

Mechanical

Operating Temperature	-10°C to 40°C
Operating Humidity	0-95% RH, Non-Condensing
Operating Environment	Interior
Operation	APP / Manual
Ingress Protection (IP)	20

Product Package

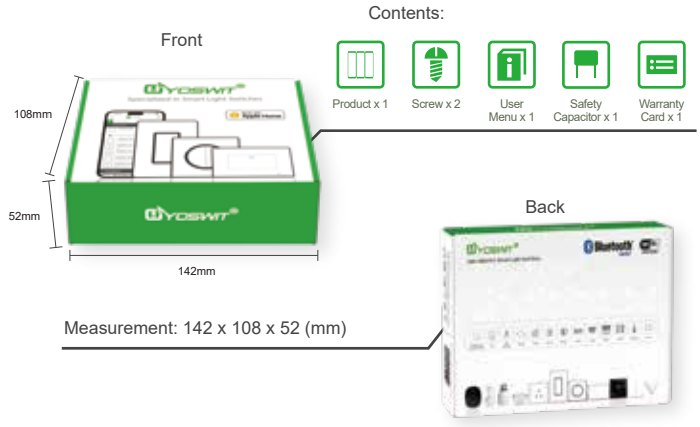

Outer Box



Quantity Per Box: 40 Pack / Box
Measurement: 58 x 31 x 23.5 (cm)

Product Warranty and Limitations

Yoswit brand products guarantee for a period of 2 years warranty from the date of purchase. During the warranty period and in the event that a defective product is identified (non-human factors), Yoswit will provide free maintenance. Damage beyond the warranty period or caused by improper use is not covered within the warranty, Yoswit will not bear any responsibility for repair, and will still provide users with a lifelong maintenance of paid services. If the products need to be repaired or returned to our company, an appropriate fee should be charged based on specific situation to cover the cost of replacement. Regardless of the warranty status, all shipping costs are borne by users.

LINCOGN TECHNOLOGY CO. LIMITED

Address: Room 202, 2/F, Building No. 19 West Science and Technology Avenue, Science Park, Shatin, N.T., Hong Kong
info@yoswit.com | Tel: (852) 3996 9396 | Fax: (852) 3119 8778 | www.yoswit.com